इंटरनेट मानक

Disclosure to Promote the Right To Information

Whereas the Parliament of India has set out to provide a practical regime of right to information for citizens to secure access to information under the control of public authorities, in order to promote transparency and accountability in the working of every public authority, and whereas the attached publication of the Bureau of Indian Standards is of particular interest to the public, particularly disadvantaged communities and those engaged in the pursuit of education and knowledge, the attached public safety standard is made available to promote the timely dissemination of this information in an accurate manner to the public.

"जानने का अधिकार, जीने का अधिकार"
Mazdoor Kisan Shakti Sangathan
"The Right to Information, The Right to Live"

"पुराने को छोड नये के तरफ"
Jawaharlal Nehru
"Step Out From the Old to the New"

IS 12374 (1987): Dimensions for swivel type coupling to dental handpieces [MHD 8: Dentistry]

"ज्ञान से एक नये भारत का निर्माण"
Satyanarayan Gangaram Pitroda
"Invent a New India Using Knowledge"

Act Number 22 of 2005
The Indian Parliament
RIGHT TO INFORMATION

Made Available By
Public.Resource.Org

"ज्ञान एक ऐसा खजाना है जो कभी चुराया नहीं जा सकता है"
Bhartṛhari—Nītiśatakam
"Knowledge is such a treasure which cannot be stolen"

BLANK PAGE

BRUTUM FULMEN

IGNORANTIA JURIS NON EXCUSAT

PROTECTED BY COPYRIGHT

UDC 615·471 : 616·314-72 : 621·825

Indian Standard

(Reaffirmed 1998)

DIMENSIONS FOR SWIVEL-TYPE COUPLING TO DENTAL HANDPIECES

(ISO Title : Dental Handpieces — Coupling Dimensions)

National Foreword

This Indian Standard, which is identical with ISO 3964-1982 'Dental handpieces — Coupling dimensions' issued by the International Organization for Standardization (ISO), was adopted by the Bureau of Indian Standards on the recommendation of the Dental Instruments and Equipment Sectional Committee and approval of the Consumer Products and Medical Instruments Division Council.

In the adopted standard, certain terminology and conventions are not identical with those used in Indian Standards, attention is particularly drawn to the following:

a) Comma (,) has been used as decimal marker, while in Indian Standards, the current practice is to use a point (.) as the decimal marker.

b) Wherever the words 'International Standard' appear referring to this standard, these should be read as 'Indian Standard'.

Dimensions for slip-joint coupling for dental handpieces are covered in IS : 5830-1970 'Dimensions for transmission coupling (slip-joint) to dental handpieces'.

Dental Instruments and Equipment Sectional Committee, CPDC 21 [Ref : Doc : CPDC 21 (2149)]

Adopted 28 December 1987 | © September 1988, BIS | Gr 2

BUREAU OF INDIAN STANDARDS
MANAK BHAVAN, 9 BAHADUR SHAH ZAFAR MARG
NEW DELHI 110002

As in the Original Standard, this Page is Intentionally Left Blank

0 Introduction

The dental handpiece is an instrument used daily by dental practitioners throughout the world. To permit the interchange of instruments from various manufacturing sources in different countries, agreement on the dimensions for the coupling units is necessary, otherwise major practical problems could arise in the use of these precision instruments.

1 Scope and field of application

This International Standard specifies the nominal dimensions and tolerances of the swivel-type coupling used between the dental handpieces and their driving mechanisms. It is not applicable to the older "slip-joint" coupling. It is restricted to mechanically coupled handpieces of the slow or medium speed types.

2 Nominal dimensions and tolerances

See figures 1 and 2.

Dimensions in millimetres

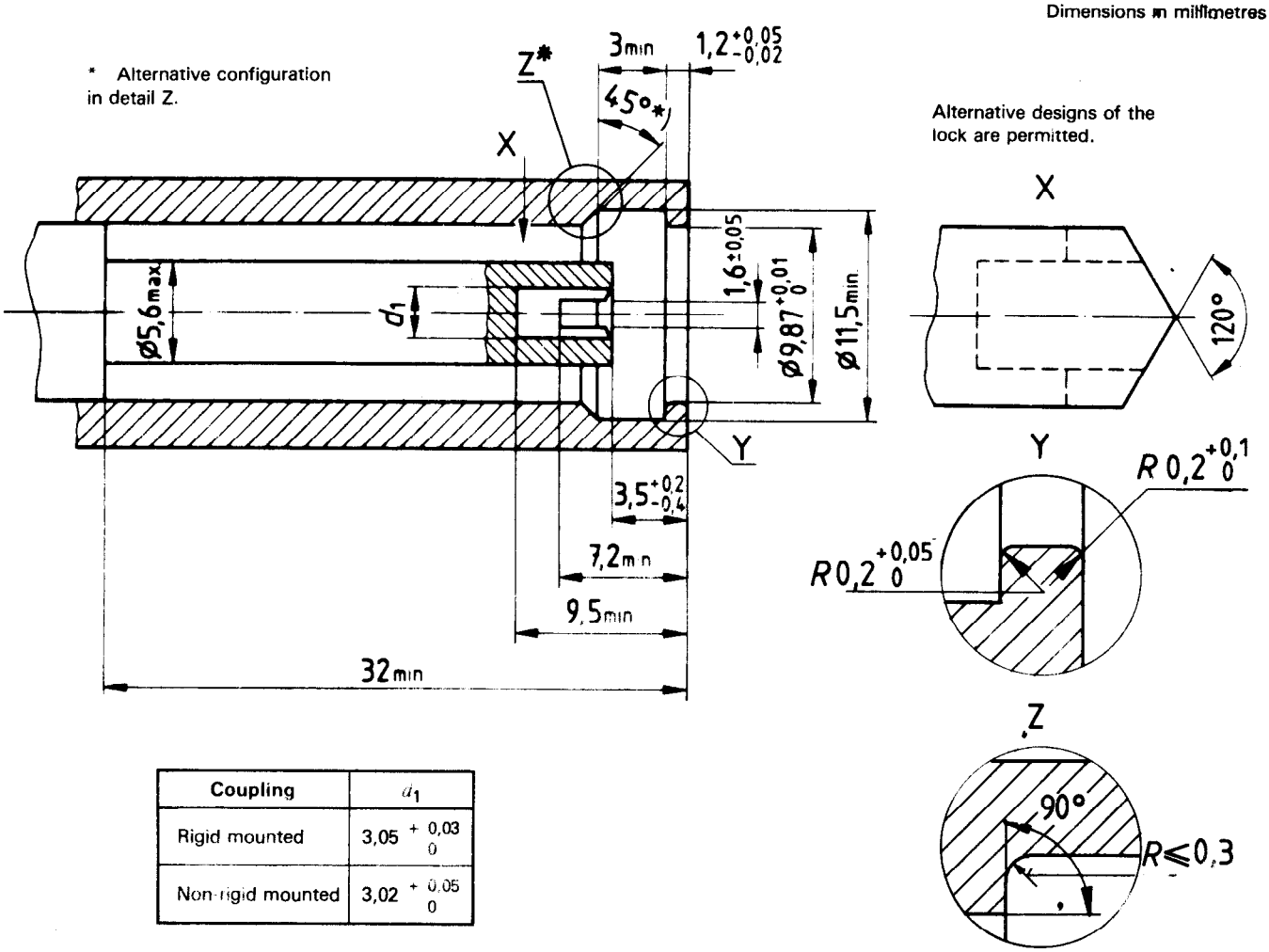

Coupling	d_1
Rigid mounted	$3{,}05\ ^{+0{,}03}_{0}$
Non-rigid mounted	$3{,}02\ ^{+0{,}05}_{0}$

Figure 1 – Instrument

Dimensions in millimetres

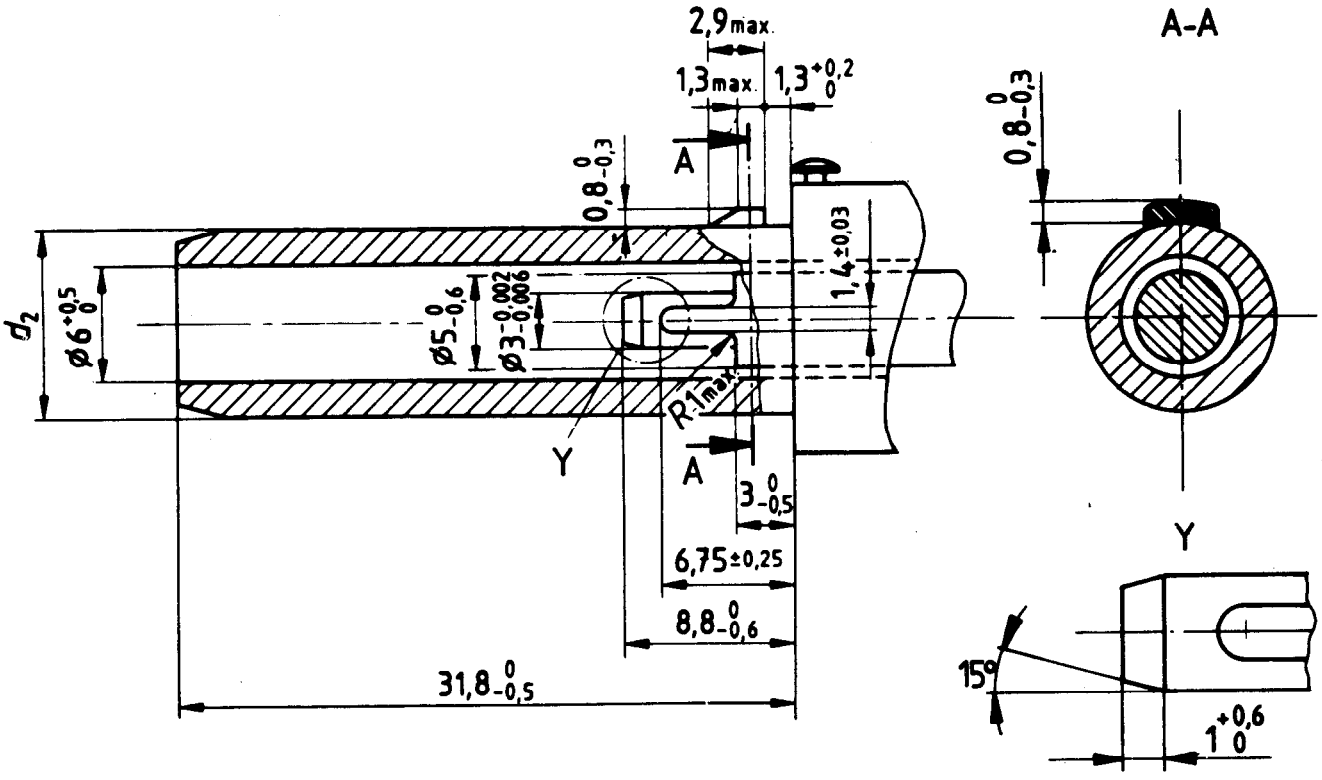

Shaft for rotational frequency of the instrument	d_2
> 25 000 r/min	$9{,}86\ ^{0}_{-0{,}01}$
< 25 000 r/min	$9{,}86\ ^{0}_{-0{,}02}$

Figure 2 — Motor

Reprography Unit, BIS, New Delhi, India